NetWell NOISE CONTROL

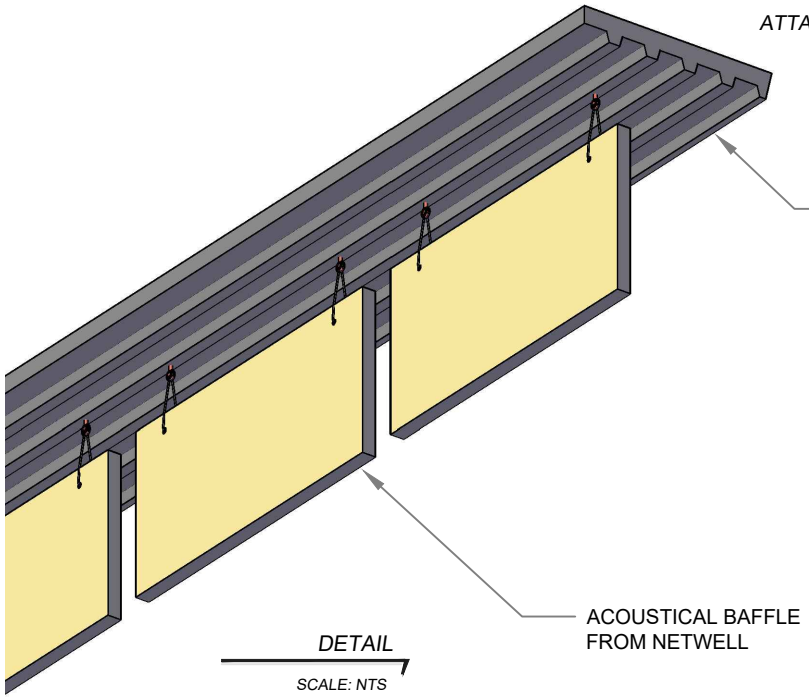


DETAIL

SCALE: NTS

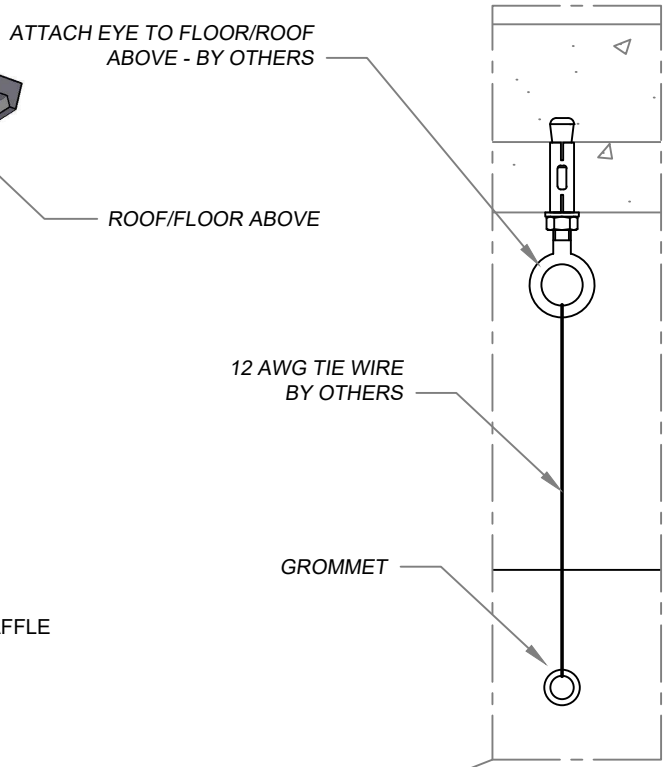


DETAIL

SCALE: 3" = 12"

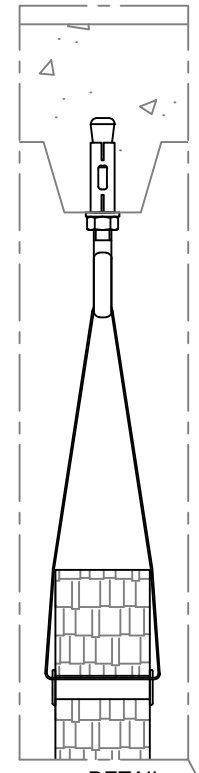

DETAIL

SCALE: 3" = 12"

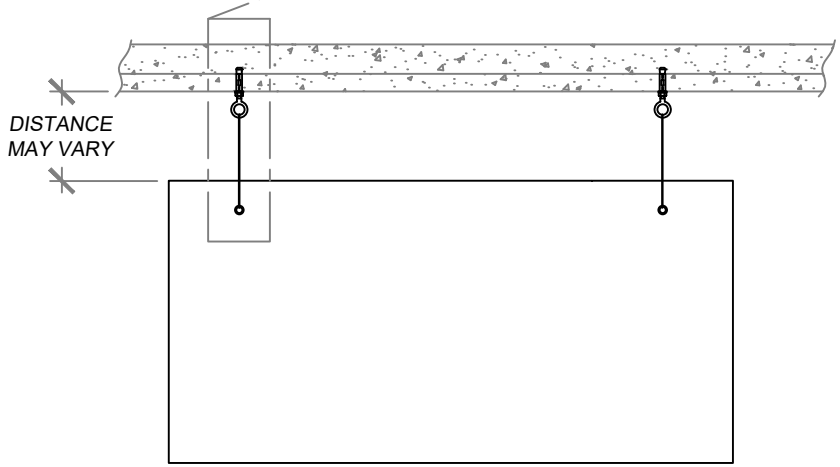


TYPICAL BAFFLE ELEVATION

SCALE: 3/4" = 12"

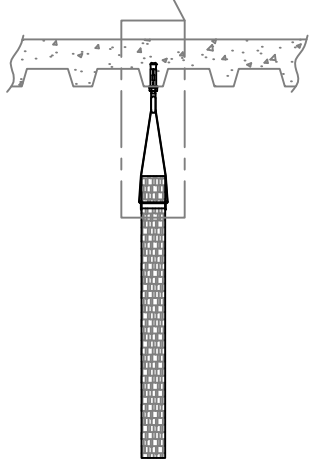

SECTION

SCALE: 3/4" = 12"

**INSTALLATION METHOD 1**
**ACOUSTICAL BAFFLES CAN BE SUSPENDED BELOW A ROOF WITH AN EYE OR HOOK INSERTED DIRECTLY ABOVE THE GROMMET LOCATION.**

NetWell
NOISE CONTROL

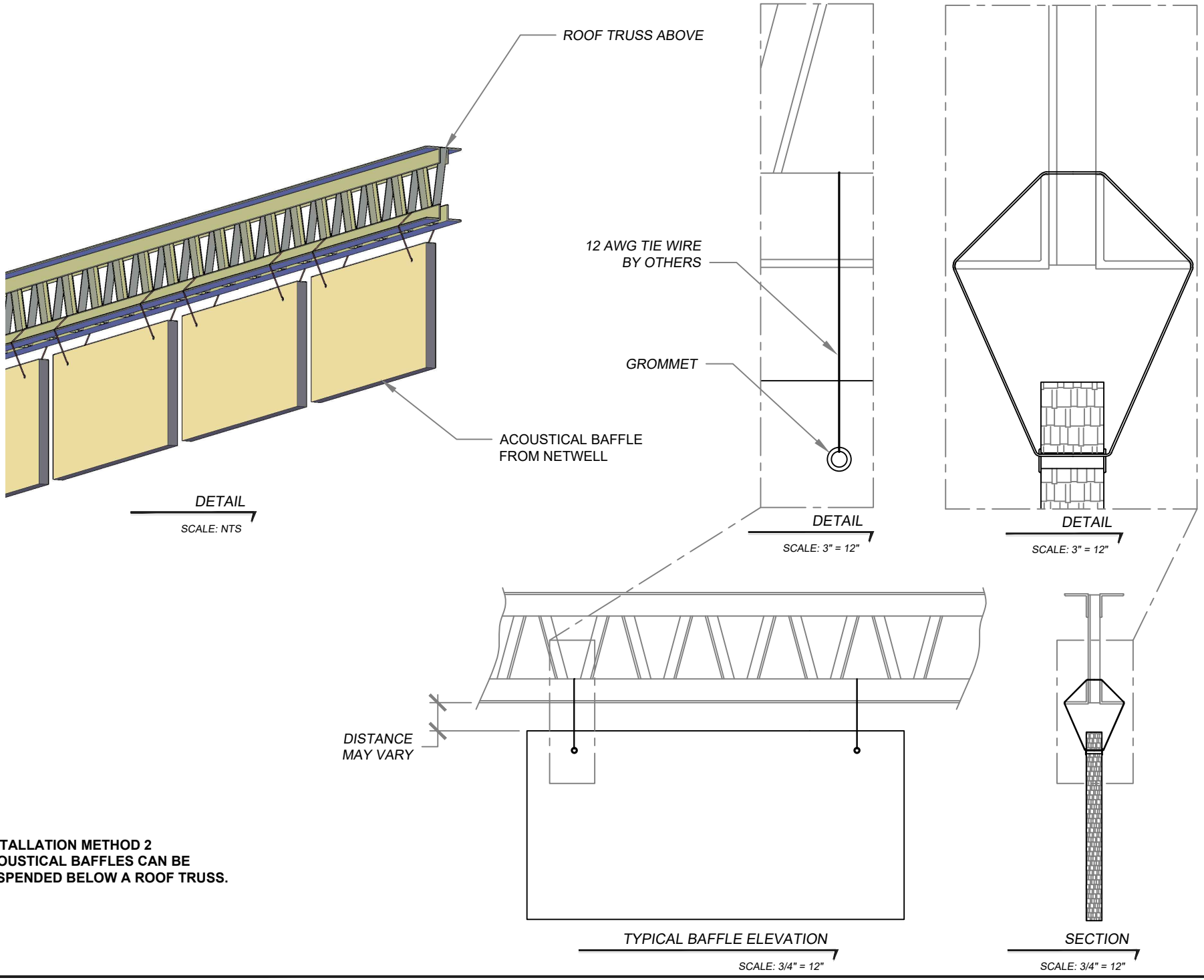


**INSTALLATION METHOD 2**
**ACOUSTICAL BAFFLES CAN BE SUSPENDED BELOW A ROOF TRUSS.**

NetWell NOISE CONTROL

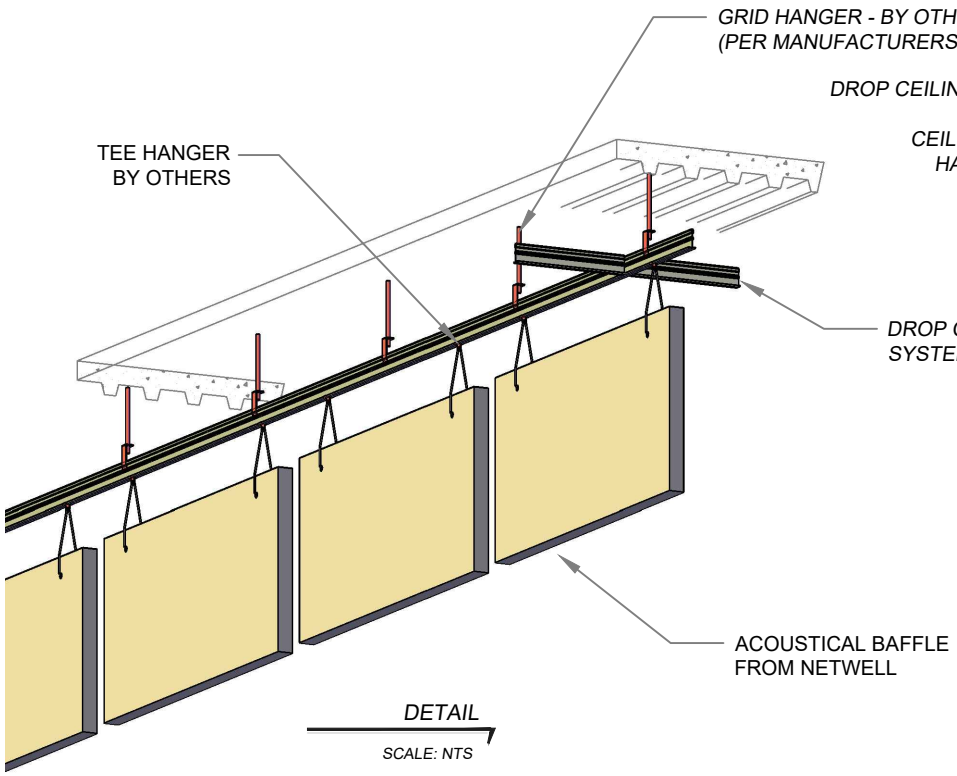


DETAIL

SCALE: NTS

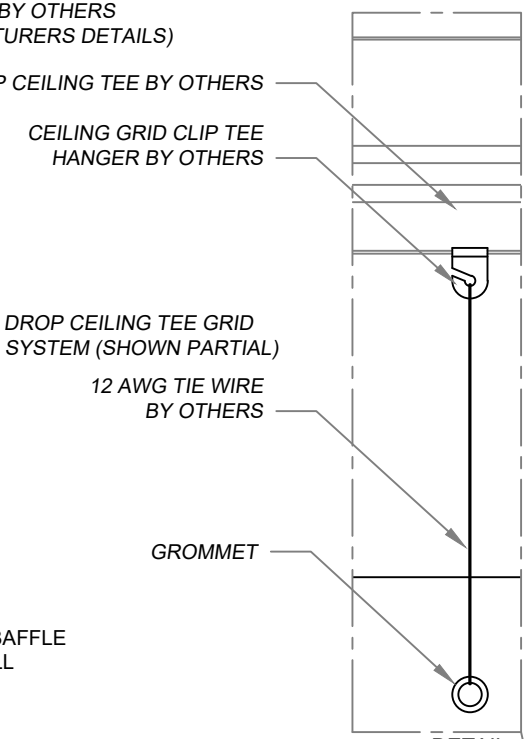


DETAIL

SCALE: 3" = 12"

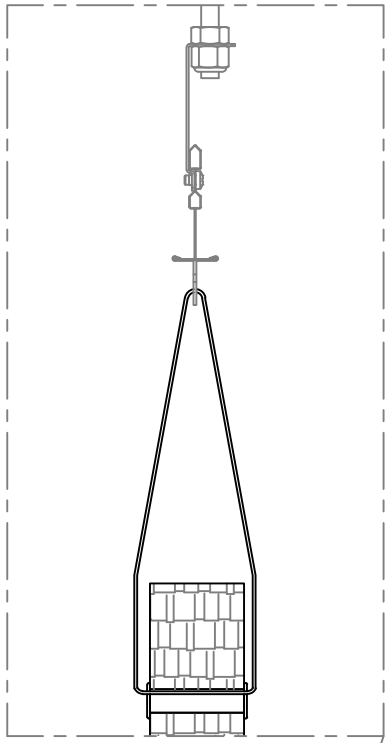

DETAIL

SCALE: 3" = 12"

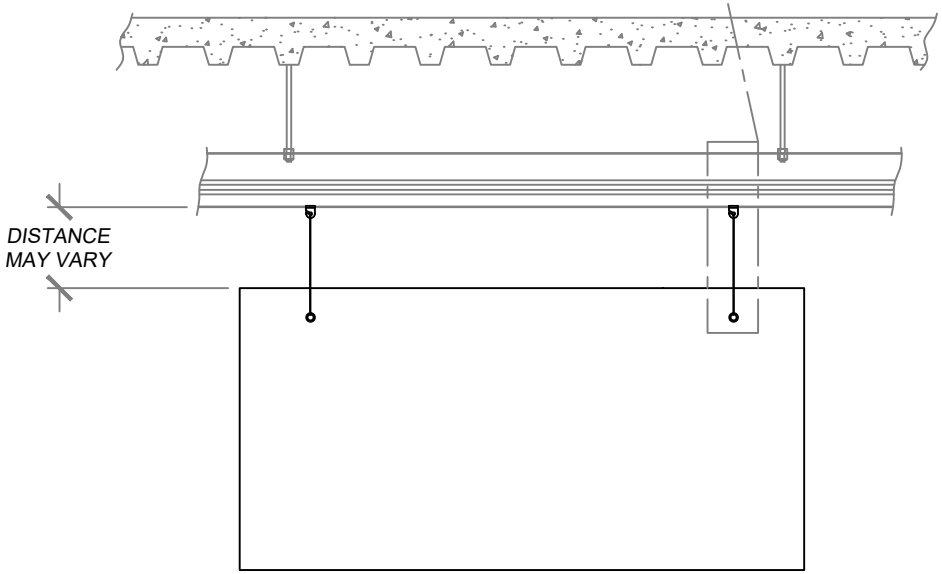


TYPICAL BAFFLE ELEVATION

SCALE: 3/4" = 12"

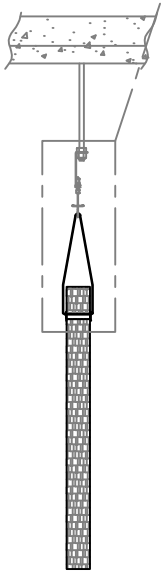

SECTION

SCALE: 3/4" = 12"

**INSTALLATION METHOD 3**
**ACOUSTICAL BAFFLES CAN BE SUSPENDED BELOW A 'DROP CEILING' GRID.**

NetWell NOISE CONTROL

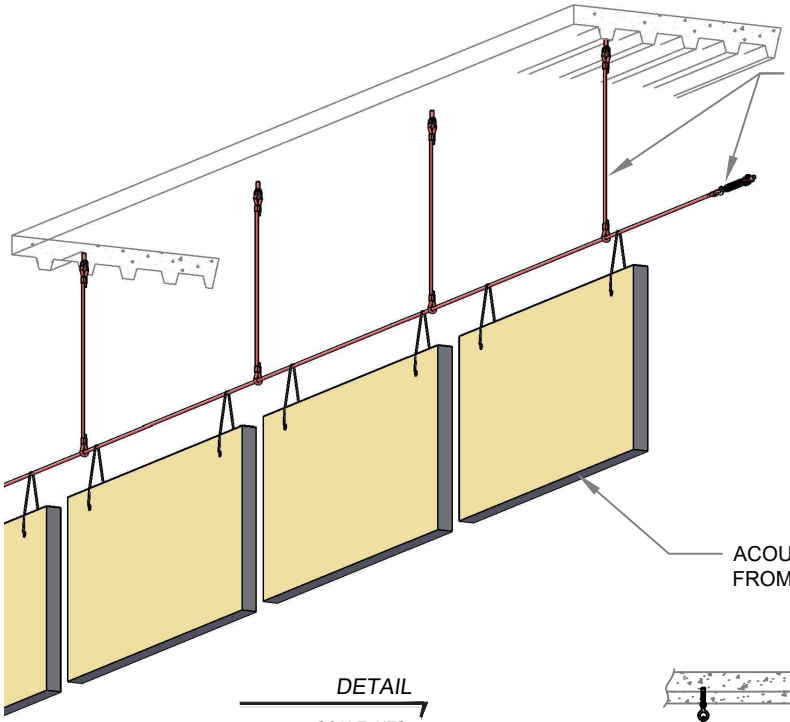


DETAIL

SCALE: NTS

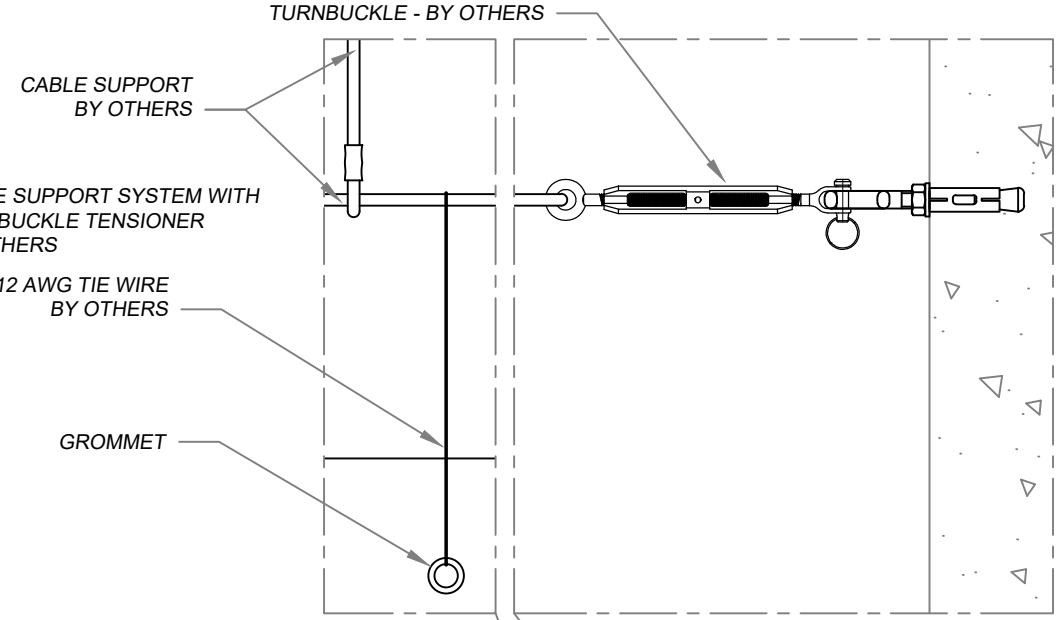


DETAIL

SCALE: 3" = 12"

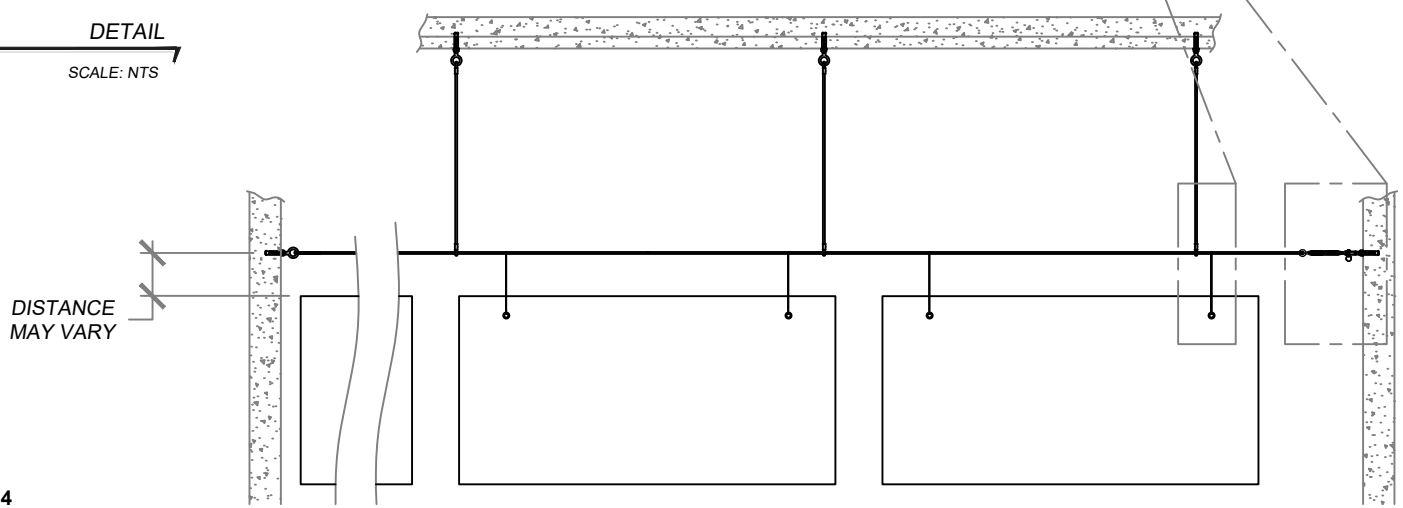


TYPICAL BAFFLE ELEVATION

SCALE: 1/2"= 12"

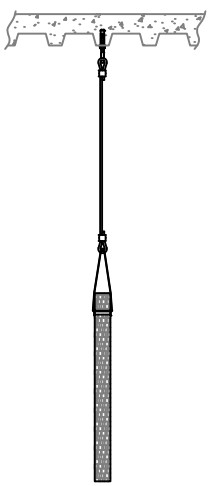

SECTION

SCALE: 1/2" = 12"

**INSTALLATION METHOD 4 ACOUSTICAL BAFFLES CAN BE SUSPENDED BELOW A CABLE SUPPORT SYSTEM.**